受 控
2023-12-19

SINOMAGS
希 磁 科 技

Current Sensor

Product Series:	STK-616AM3
Part number:	STK-616A-50ML3B5 STK-616A-50ML3B3 STK-616A-66ML3B5 STK-616A-90ML3B5
Version:	Ver 1.1

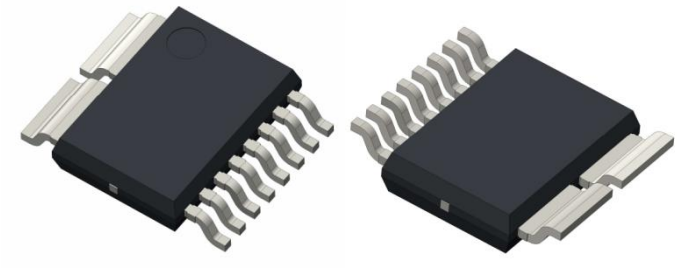

Sinomags Technology Co., Ltd

Web site: www.sinomags.com

受 控
2023-12-19

CONTENT

1. Description 2
2. Part number definition 3
3. Temperature vs Current 3
4. Electrical data STK-616A-XXML3B5 4
5. Electrical data STK-616A-XXML3B3 5
6. Dimensions 6
7. Pin definitions 6
8. PCB layout recommendation 7
9. Frequency band width 7
10. Step response time 8
11. Block diagram 8
12. Typical application circuit 9
13. OCD function for STK-616A-50ML3B5 9
14. General information on OCD 10

受 控
2023-12-19

1. Description

The STK-616AM3 series current sensor is based on TMR (tunnel magnetoresistance) technology and open-loop design. It is suitable for DC, AC pulsed and any kind of irregular current measurement under the isolated conditions. The STK-616AM3 series current sensor has built in OCD (Over Current Detection) function. The primary conductor has very low resistance of 0.27mΩ.

Typical applications

- AC Variable speed driver
- PV inverter
- AC/DC, DC/DC power supply
- Servo motor driver

General parameter

Parameter	Symbol	Unit	Value
Junction temperature	T_A	℃	-40 ~ 125
Storage temperature	T_stg	℃	-40 ~ 125
Mass	m	g	0.65

Absolute maximum rating

Parameter	Symbol	Unit	Value
Supply voltage	Vcc	V	6.5
ESD rating (HBM)	U_ESD	kV	4
Junction temperature	T_J	℃	150

Remark: the unrecoverable damage may occur when the product works on the conditions over the absolute maximum ratings. Long-time working on the absolute maximum ratings may cause the degradation on performance and reliability.

Isolation parameter

Parameter	Symbol	Unit	Value	Comment
RMS voltage for AC test 50 Hz, 1 min	Ud	kV	4	
Impulse withstand voltage 1.2/50µs	Ûw	kV	6	
Clearance distance (pri. -sec)	dCl	mm	8.5	Determined by customer's layout
Creepage distance (pri. -sec)	dCp	mm	8.5	

Measuring current table

Part number	Current Range	Sensitivity (mV/A)	T (℃)
STK-616A-50ML3B5-1-2.5-E-3-C-N-1	±50 A	40	-40 ~ 105
STK-616A-50ML3B3-1-1.65-E-3-C-N-1	±50 A	26.4	-40 ~ 105
STK-616A-66ML3B5-1-2.5-E-3-C-N-1	±66 A	30	-40 ~ 105
STK-616A-90ML3B5-1-2.5-E-3-C-N-1	±90 A	22.2	-40 ~ 105

受 控
2023-12-19

2. Part number definition

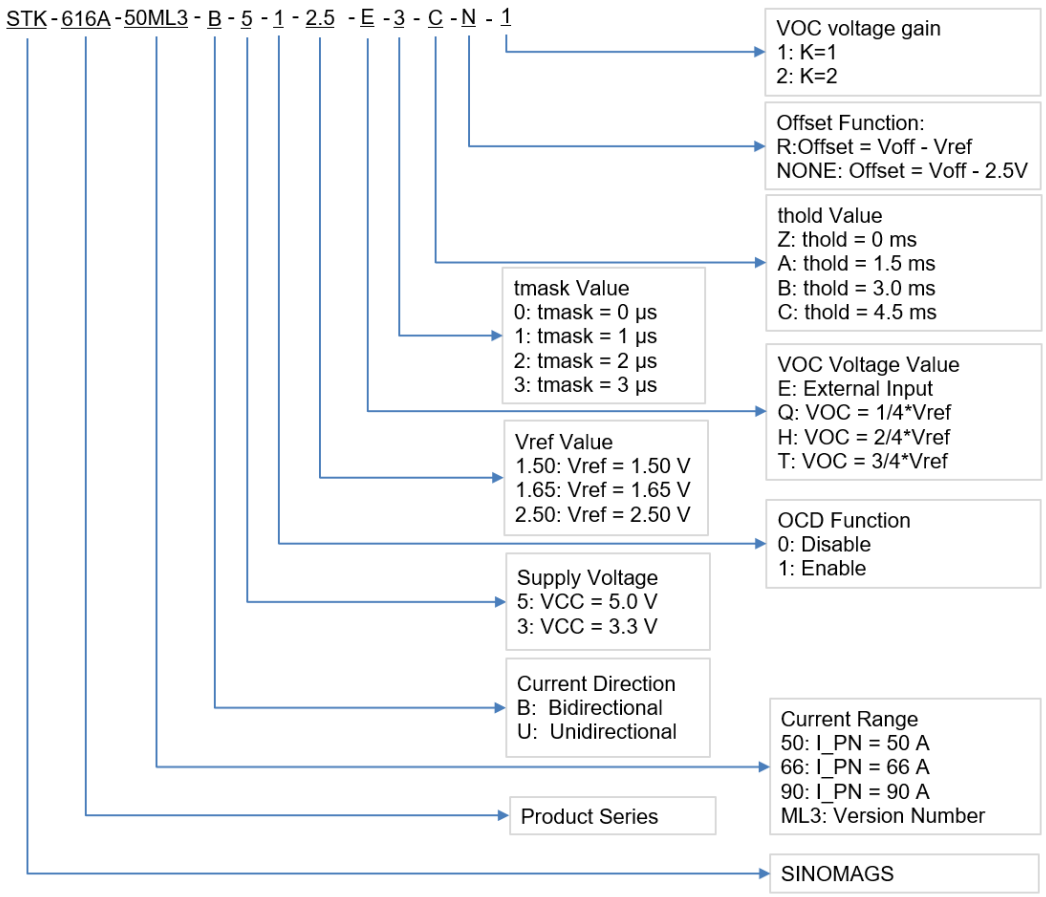

3. Temperature vs Current

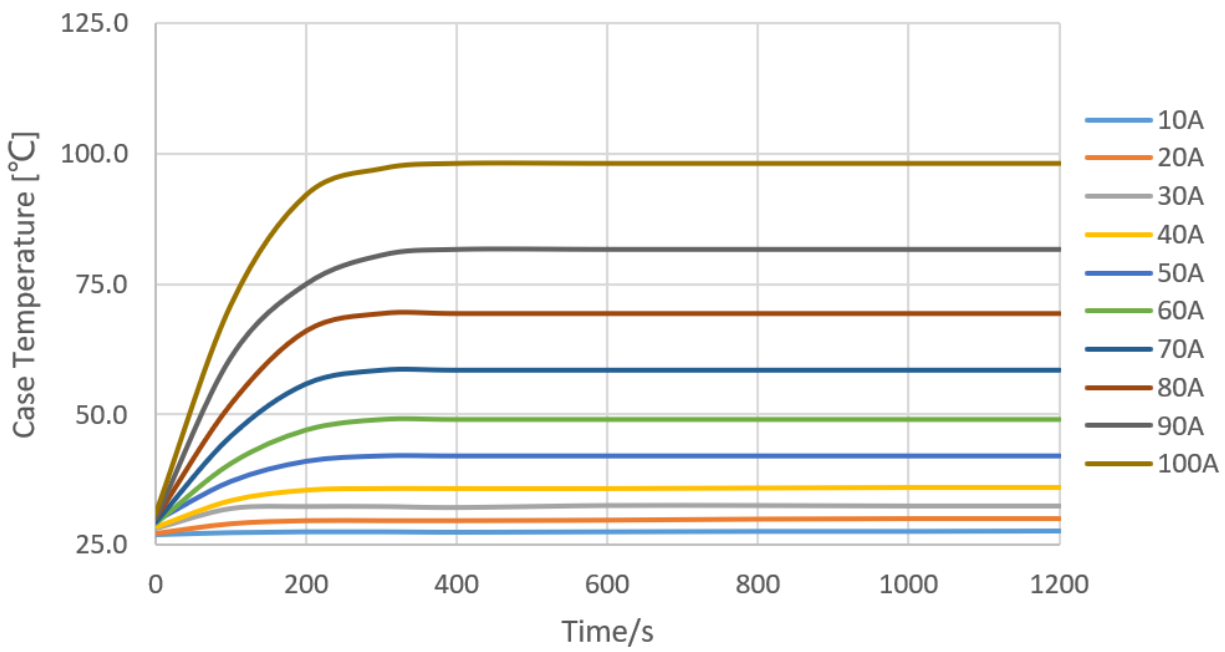

Figure 1. Relationship between STK-616AM3 Case temperature and amount of input current.

受 控
2023-12-19

Figure 1 shows the results of current & temperature measurement. Tested by using a standard demo test board, with 4 layers of copper conductors, where the thickness for each layer is 2 oz, the total thickness of demo board is 1.6 mm. This result is a reference data. Tc is changed much by the board layout and the heat dissipation. Please confirm it in your evaluation environment.

4. Electrical data STK-616A-XXML3B5

Condition：T_A = 25℃, Vcc = 5 V

Parameter	Symbol	Unit	Min	Typ	Max	Comment
Primary nominal current	I_pn	A	-50		50	STK-616A-50ML3B5
			-66		66	STK-616A-66ML3B5
			-90		90	STK-616A-90ML3B5
Primary current measuring range	I_pm	A	-50		50	STK-616A-50ML3B5
			-66		66	STK-616A-66ML3B5
			-90		90	STK-616A-90ML3B5
Supply voltage	Vcc	V		5		
Current consumption	Icc	mA		5	10	
Primary conductor resistance	R_IP	mΩ		0.27		
Reference voltage	Vref	V	2.45	2.50	2.55	Internal use
Quiescent voltage	Voff	V	2.45	2.50	2.55	Vout @ I_p = 0A
Internal output resistance	R_out	Ω		1		Vout
Theoretical gain (@ Voff = 2.5, Note 1)	G_th	mV/A		40		STK-616A-50ML3B5
				30		STK-616A-66ML3B5
				22.2		STK-616A-90ML3B5
OCD function (if applicable)						
OCD range	VOC	V	0.3		3.3	K=1
			0.3		2	K=2
FAULT error		%		5%		% of OCD
OCD Hysteresis	IHYS	%		10%		% of OCD
OCD Fault Mask	tmask	μs		2		Note 2)
OCD Fault Mask error	Tmask_error	ns		125		
OCD Fault Hold Time	thold	ms		4.5		Note 3)
Accuracy performance						
Rated linearity @ 25℃	ξ	% of I_pn		±1.5		±I_PN
Step response time	t_res	μs		0.9		@90% of I_pn
Frequency bandwidth	BW	kHz		600		@ -3 dB
Output voltage noise	Vnoise	mVpp		10		DC ~ 600 kHz
Accuracy @ 25℃	X	% of I_pn		±1		@ 25℃
Thermal drift of G_th	GAIN_T	% of G_th		±1.5		@-40~105℃ Drift related to the value @ 25℃
Thermal drift of Voff	Voff_T	mV		±15		
Total Accuracy	X_T	% of I_pn		±3.5		

受 控
2023-12-19

5. Electrical data STK-616A-XXML3B3

Condition：T_A = 25℃, Vcc = 3.3 V

Parameter	Symbol	Unit	Min	Typ	Max	Comment
Primary nominal current	I_pn	A	-50		50	STK-616A-50ML3B3
Primary current measuring range	I_pm	A	-50		50	STK-616A-50ML3B3
Supply voltage	Vcc	V		3.3		
Current consumption	Icc	mA		5	10	
Primary conductor resistance	R_IP	mΩ		0.27		
Reference voltage	Vref	V	1.6	1.65	1.7	Internal use
Quiescent voltage	Voff	V	1.6	1.65	1.7	Vout @ I_p = 0A
Internal output resistance	R_out	Ω		1		Vout
Theoretical gain (@ Voff = 2.5, Note 4)	G_th	mV/A		26.4		STK-616A-50ML3B3
OCD function (if applicable)						
OCD range	VOC	V	0.3		1.6	K=1
			0.3		1.6	K=2
FAULT error		%		5%		% of OCD
OCD Hysteresis	IHYS	%		10%		% of OCD
OCD Fault Mask	tmask	μs		2		Note 5)
OCD Fault Mask error	Tmask_error	ns		125		
OCD Fault Hold Time	thold	ms		4.5		Note 6)
Accuracy performance						
Rated linearity @ 25℃	ξ	% of I_pn		±1.5		±I_PN
Step response time	t_res	μs		0.9		@90% of I_pn
Frequency bandwidth	BW	kHz		600		@ -3 dB
Output voltage noise	Vnoise	mVpp		10		DC ~ 600 kHz
Accuracy @ 25℃	X	% of I_pn		±1		@ 25℃
Thermal drift of G_th	GAIN_T	% of G_th		±1.5		@-40~105℃ Drift related to the value @ 25℃
Thermal drift of Voff	Voff_T	mV		±15		
Total Accuracy	X_T	% of I_pn		±3.5		

Note：

1) The gain of the sensor should be calibrated in software level if an accurate measuring is required.
2) The default time for OCD Fault Mask Time is 3us, while it can be set as 0, 1, 2, 3 us per demand.
3) The default time for OCD Fault Hold Time is 4.5ms, while it can be set as 0, 1.5, 3, 4.5ms per demand.
4) The gain of the sensor should be calibrated in software level if an accurate measuring is required.
5) The default time for OCD Fault Mask Time is 3us, while it can be set as 0, 1, 2, 3 us per demand.

受 控
2023-12-19

6) The default time for OCD Fault Hold Time is 4.5ms, while it can be set as 0, 1.5, 3, 4.5ms per demand.

6. Dimensions

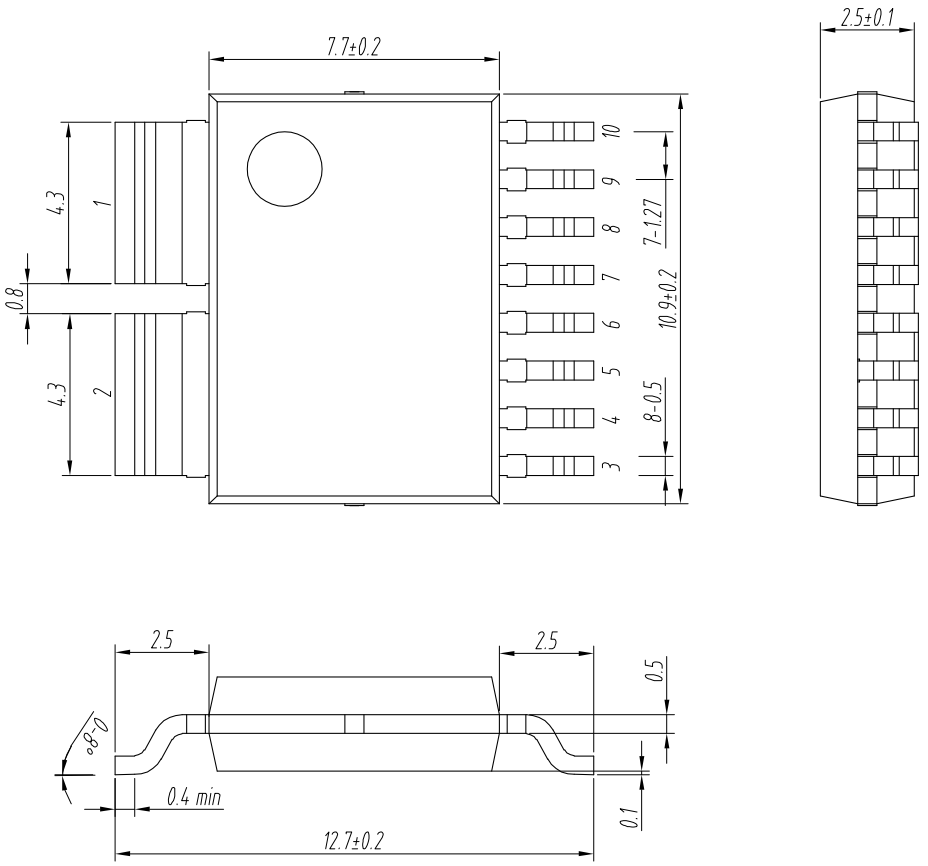

Figure 2. Dimensions of STK-616AM3 series current sensors. The unit is mm.

7. Pin definitions

PIN	Symbol	Description
1	IP+	Primary conductor pin (+)
2	IP-	Primary conductor pin (-)
3	FAULT	Over current detection alarm output, the pin is open leakage output
4	VCC	Power supply pin
5	VREF	Reference voltage output
6	VOUT	Sensor output pin
7	VOC	Over current detection threshold input pin
8,10	NC	NC
9	GND	Ground pin (GND)

受 控
2023-12-19

8. PCB layout recommendation

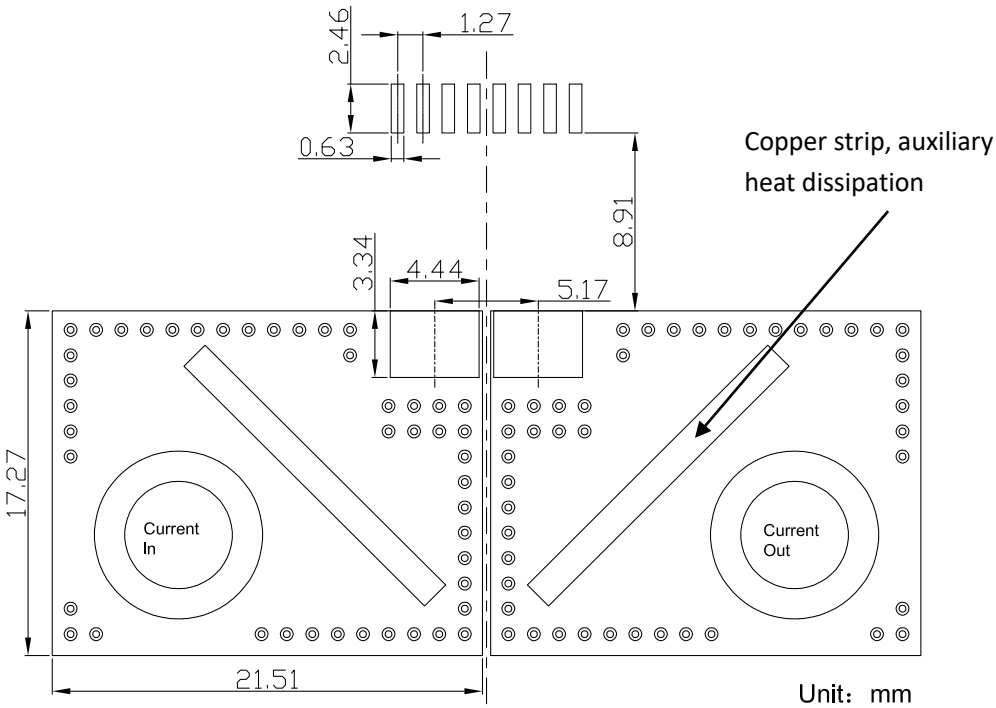

Figure 3. The recommended footprint of the SMT PCB layout for the STK-616AM3 series products. The unit is mm.

9. Frequency band width

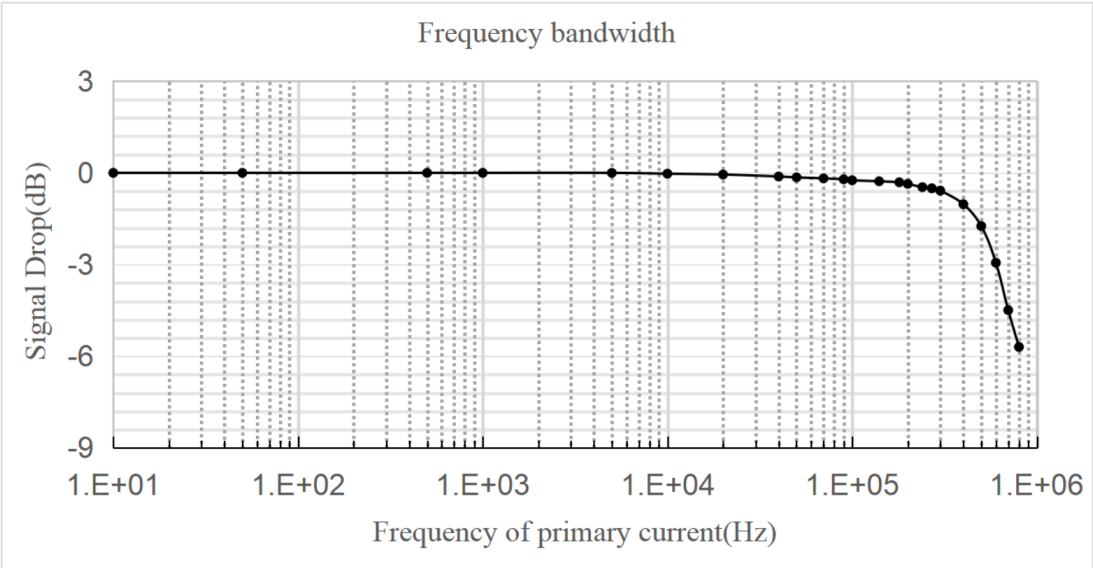

Figure 4. The frequency band width of the STK-616AM3 series products. the upper limit of the -3 dB band width is 600 kHz.

受 控
2023-12-19

10. Step response time

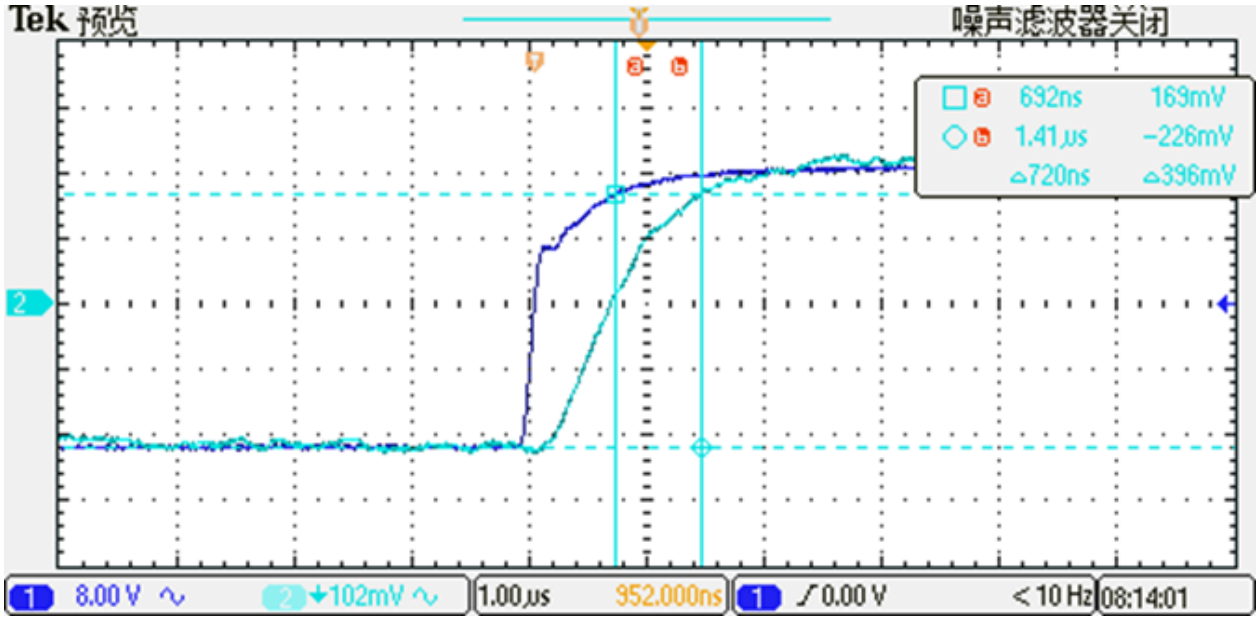

Figure 5. The typical frequency response of STK-616AM3 series current sensor. The response time from 90% of the primary current to 90% of the secondary output is 0.9μs.

11. Block diagram

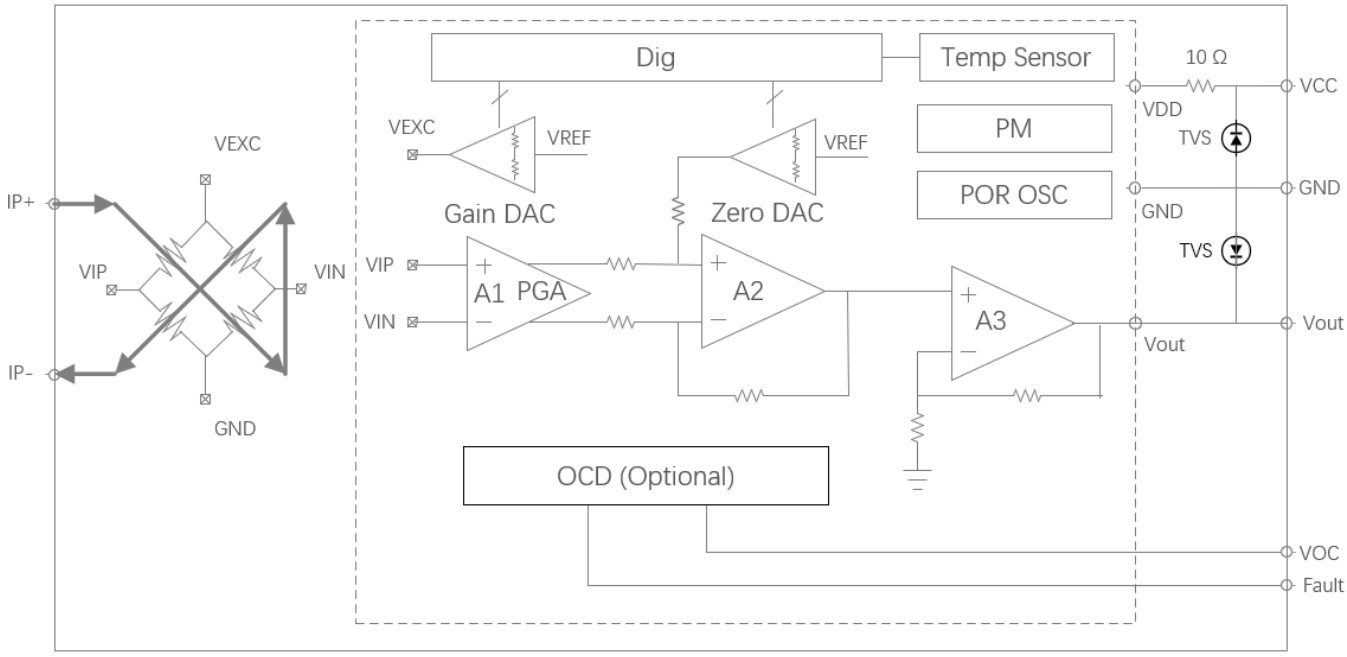

Figure 6. The functional block diagram for the STK-616AM3 series products.

受 控
2023-12-19

12. Typical application circuit

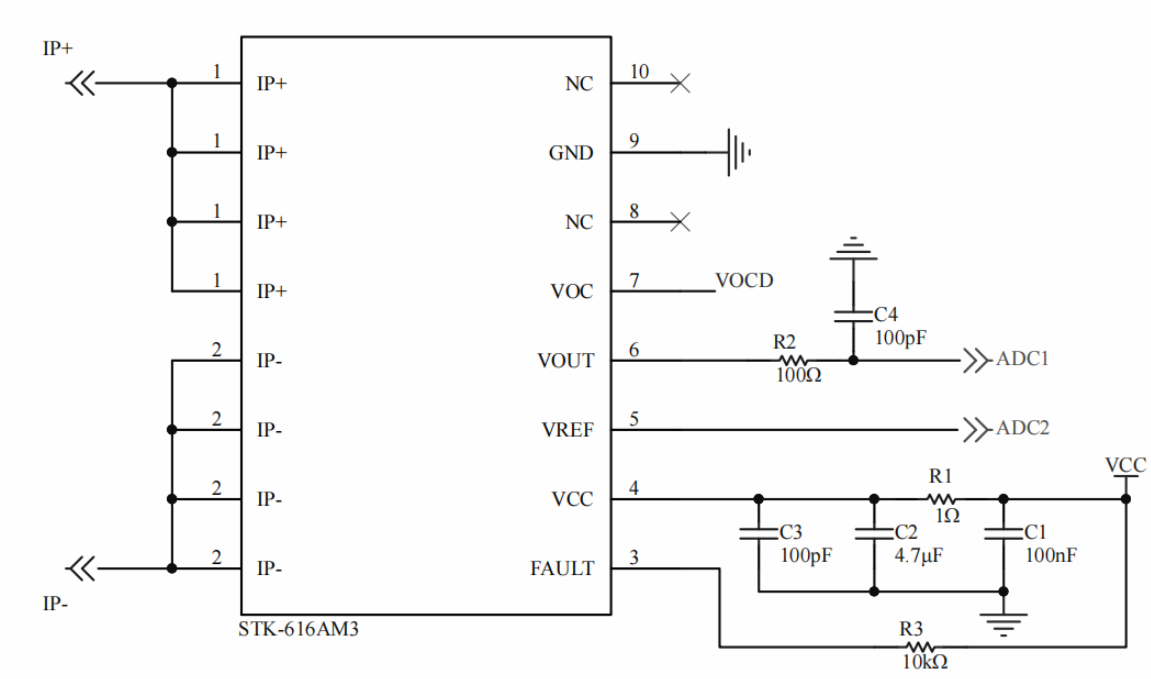

Figure 7. The reference application circuit for the STK-616AM3 series products.

Remark 1: R3 = 10 kΩ, recommended C1 = 100 nF. C2 = 4.7 μF, C3 = 100pF, C4 = 100 pF. 100pF of C4 does not affect the response speed of the chip. R2 and C4 constitute RC filter circuit (f ≈ 1/(2πRC)). The bandwidth of STK-616AM6 is 600 kHz, and RC filter circuit above 600 kHz cannot realize a bandwidth above 600 kHz. If the VREF pin is not used, it can be left empty. If there is a need for an external capacitor, it is necessary to ensure that the capacitance value is greater than 100 nF.

Remark 2: The VREF and VOUT pins cannot be connected directly to a capacitor. If a capacitor is required in the circuit, connect a resistor in series before the capacitor. It is recommended to select a series resistance of 100 Ω or more.

13. OCD function for STK-616A-50ML3B5

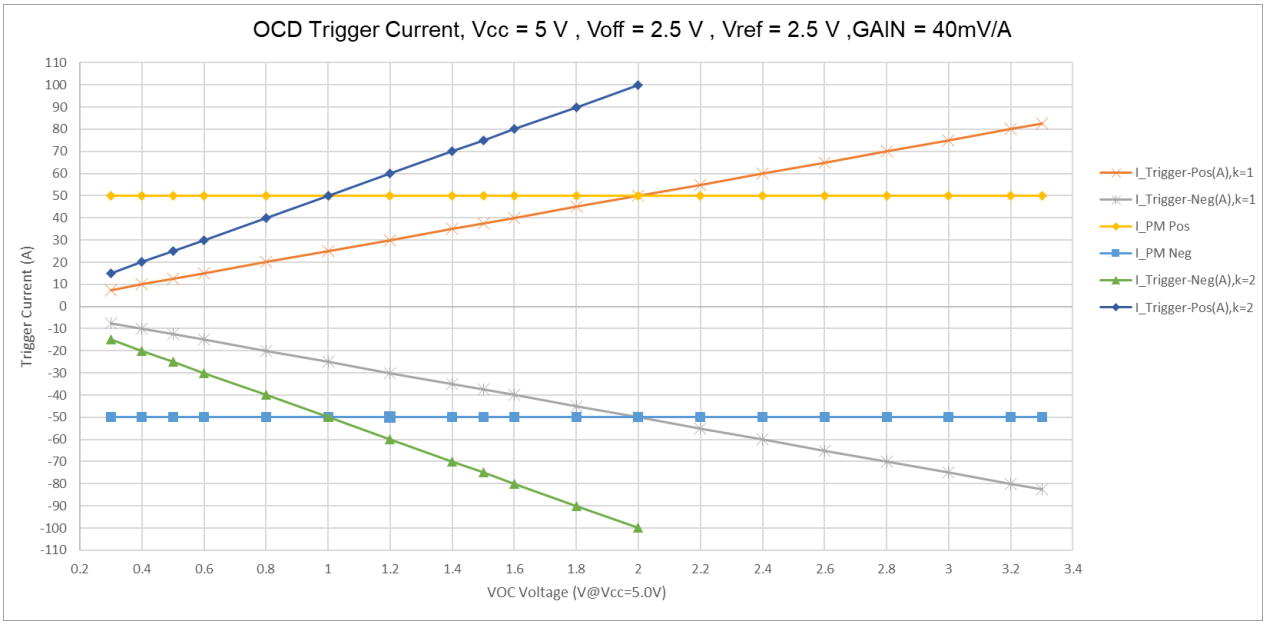

受 控
2023-12-19

Figure 9 the relationship of trigger current and VOC setting for the STK-616A-50ML3B5, with Vcc = 5 V. I_trigger_pos represents the forward over-current protection trigger current. I_trigger_neg represents the negative over-current protection trigger current. I_PN_pos represents the forward primary nominal current. I_PN_neg represents the negative primary nominal current. K is OCD coefficient, with typical values of 1, 2. I_PN is shown in the electrical data table.

14. General information on OCD

This section describes the general information on OCD function, the specific functions, which are not listed in the section of “electrical data”, can be defined per request.

Since the trigger voltage is set after the second amplifier, the OCD function supports that the trigger current can be higher than I_PN. The trigger voltage and the trigger current are shown as fellows.

a) Vcc = 5 V, Vref = 2.5 V, Voff = 2.5 V,K=1.
   a) 0.3 V ≤ VOC ≤ 3.3 V;
   b) V_trigger = Vref ± K * VOC / G3;
   c) I_trigger = (Vref ± K * VOC - Voff) / G_th;
b) Vcc = 5 V, Vref = 2.5 V, Voff = 2.5 V,K=2.
   a) 0.3 V ≤ VOC ≤ 2 V;
   b) V_trigger = Vref ± K * VOC / G3;
   c) I_trigger = (Vref ± K * VOC - Voff) / G_th;
c) Vcc = 3.3 V, Vref = 1.65 V, Voff = 1.65 V, K=1.
   a) 0.3 V ≤ VOC ≤ 1.6 V;
   b) V_trigger = Vref ± K * VOC / G3;
   c) I_trigger = (Vref ± K * VOC - Voff) / G_th;
d) Vcc = 3.3 V, Vref = 1.65 V, Voff = 1.65 V, K=2.
   a) 0.3 V ≤ VOC ≤ 1.6 V;
   b) V_trigger = Vref ± K * VOC / G3;
   c) I_trigger = (Vref ± K * VOC - Voff) / G_th;

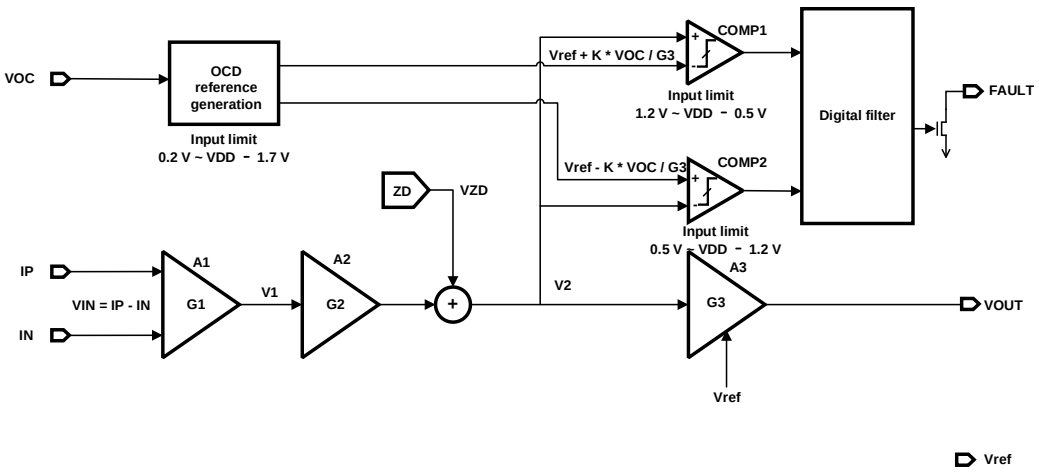

Figure 11 the functional block diagram for STK-616AM3 on OCD function with conditions of Vcc = 5 V, Voff = 2.5 V, Vref = 2.5V.